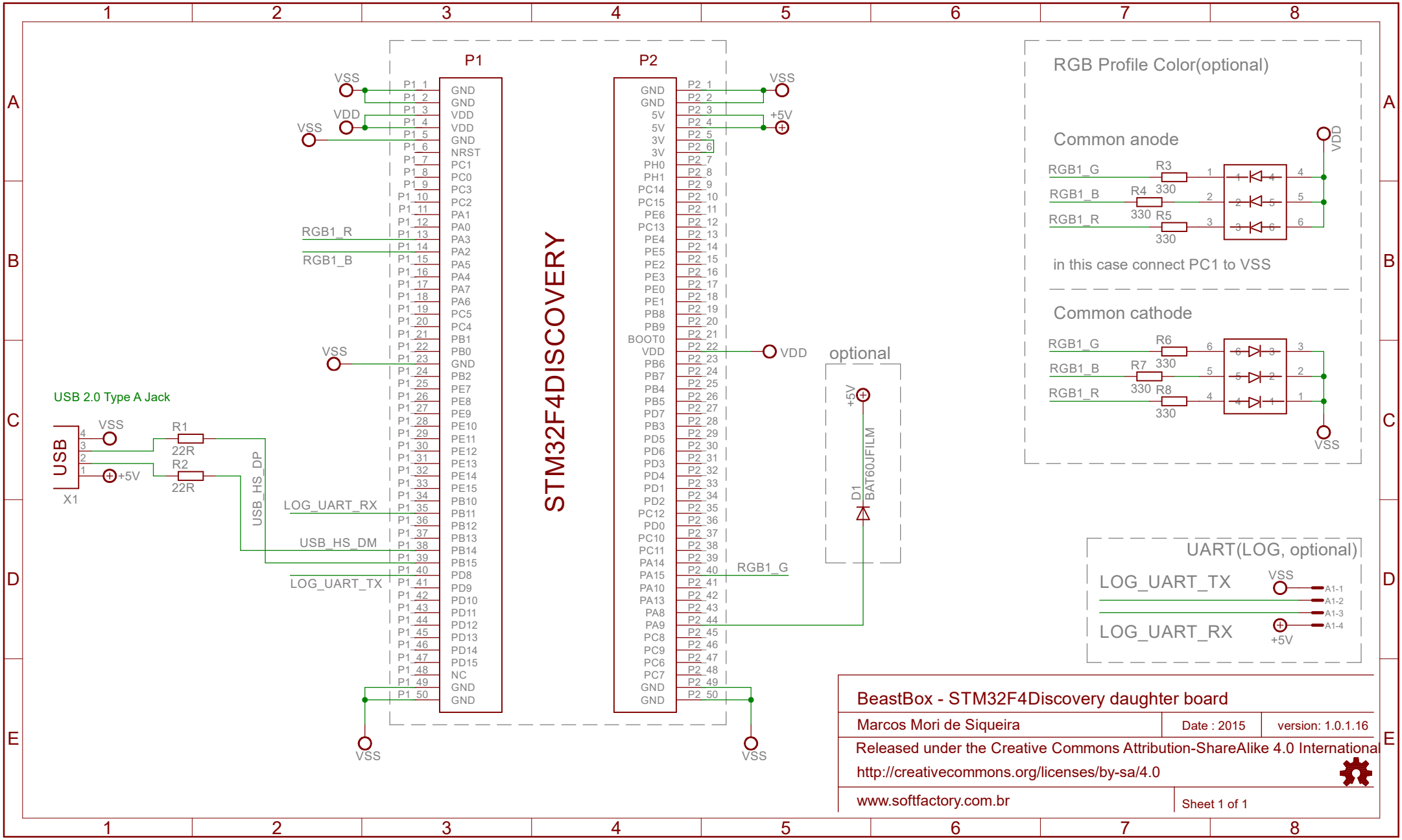
P1
P2
STM32F4DISCOVERY
USB 2.0 Type A Jack
USB
X1
VSS
VDD
+5V
R1
22R
R2
22R
USB_HS_DP
USB_HS_DM
LOG_UART_RX
LOG_UART_TX
RGB1_R
RGB1_B
RGB1_G
optional
D1
BAT60JFILM
RGB Profile Color(optional)
Common anode
R3
R4
R5
330
in this case connect PC1 to VSS
Common cathode
R6
R7
R8
UART(LOG, optional)
A1-1
A1-2
A1-3
A1-4
BeastBox - STM32F4Discovery daughter board
Marcos Mori de Siqueira
Date : 2015
version: 1.0.1.16
Released under the Creative Commons Attribution-ShareAlike 4.0 International
http://creativecommons.org/licenses/by-sa/4.0
www.softfactory.com.br
Sheet 1 of 1